Summary in Graph

Exam Summary (GO Classes CS Test Series 2026 | Mixed Subjects | Full Length Test 2)

Qs. Attempted:	0 0 + 0	Correct Marks:	0 0 + 0
Correct Attempts:	0 0 + 0	Penalty Marks:	0 0 + 0
Incorrect Attempts:	0 0 + 0	Resultant Marks:	0 0 + 0

Total Questions:	65 30 + 35
Total Marks:	100 30 + 70
Exam Duration:	180 Minutes
Time Taken:	0 Minutes

Individual Question Statistics

Select Metric: Marks Obtained

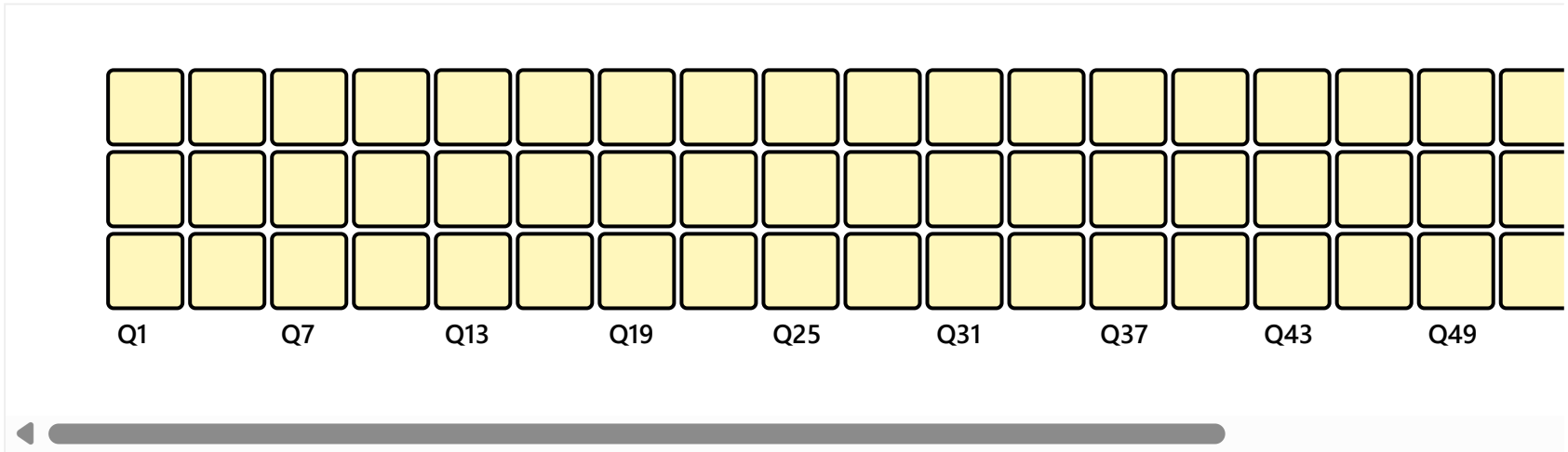

* Average Stats based on first-attempt stats of Top 10% (29) out of 287 users

EXAM RESPONSE | EXAM STATS | FEEDBACK

Technical

Q #1 | Multiple Choice Type | Award: 1 | Penalty: 0.33 | Theory of Computation

Which of the following sets of bit strings CANNOT be described with a regular expression?

A. All bit strings whose number of zeros is a multiple of five
B. All bit strings starting with a zero and ending with a one
C. All bit strings with an even number of zeros
D. All bit strings with more ones than zeros

Your Answer: | Correct Answer: D | Not Attempted | Time taken: 00min 00sec | Discuss

Q #2 | Multiple Choice Type | Award: 1 | Penalty: 0.33 | Theory of Computation

Which of the following strings the DFA accepts?

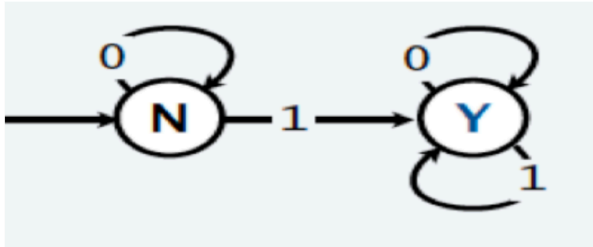

Figure 1 : DFA recognizing binary strings with certain pattern

A. Bitstrings that end in 1.
B. Bitstrings with an equal number of occurrences of 01 and 10.
C. Bitstrings with at least one 1.
D. None

Your Answer: | Correct Answer: D | Not Attempted | Time taken: 00min 00sec | Discuss

Q #3 | Multiple Select Type | Award: 1 | Penalty: 0 | Theory of Computation

Which of the following strings match the regular expression $a^*bb(ab \mid ba)^*$

A. abb
B. $aaba$
C. $abba$
D. $bbbaab$

Your Answer: | Correct Answer: A;D | Not Attempted | Time taken: 00min 00sec | Discuss

Q #4 | Multiple Choice Type | Award: 1 | Penalty: 0.33 | Theory of Computation

It is known that the language $\mathrm{L} \subseteq \{a, b\}^*$ that consists of all strings that contain an equal number of a 's and b 's is context-free. Let M be the regular language $a * b^*$.

Which of the following is (are) true?

I. $\mathrm{L} \cap \mathrm{M}$ is a context-free language.
II. $\mathrm{L} \cap \mathrm{M}$ is a regular language.
III. $\mathrm{L} \cap \mathrm{M} = \{a^n b^m \mid n$ is a positive integer less than integer $m\}$.

A. None
B. I only
C. III only
D. I and III

Your Answer: | Correct Answer: B | Not Attempted | Time taken: 00min 00sec | Discuss

Q #5 | Multiple Choice Type | Award: 1 | Penalty: 0.33 | Theory of Computation

Which of the following regular expressions will not generate a string with two consecutive 1s? (Note that ε denotes the empty string.)

I. $(1+\varepsilon)(01+0)^*$
II. $(01+10)^*$
III. $(0+1)^*(0+\varepsilon)$

A. I only
B. II only
C. III only
D. I and II only

Your Answer: | Correct Answer: A | Not Attempted | Time taken: 00min 00sec | Discuss

Q #6 | Multiple Choice Type | Award: 1 | Penalty: 0.33 | Theory of Computation

Which of the following is the Language accepted by this automata?

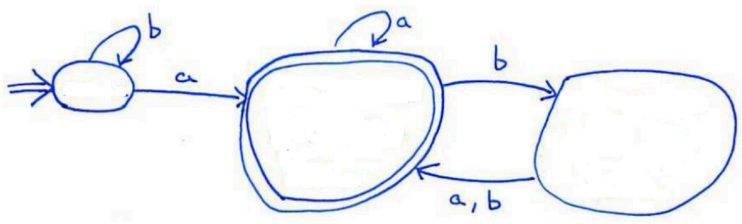

A. Set of all strings ending with a.
B. Set of strings with at least one a and an even number of b's.
C. Set of strings with at least one a and an even number of b's following the last a.
D. Set of strings ending with a and an even number of b's following the last a.

Your Answer: | Correct Answer: C | Not Attempted | Time taken: 00min 00sec | Discuss

Q #7 | Multiple Choice Type | Award: 1 | Penalty: 0.33 | Theory of Computation

$$\mathrm{L}_1 = \{ww^R / w \in \{0,1\}^*\}$$
$$\mathrm{L}_2 = \{wcw^R / w \in \{0,1\}^*\}$$
$$\mathrm{L}_3 = \{ww / w \in \{0,1\}^*\}$$

Which one of the following is TRUE?

A. L_1 is deterministic CFL
B. L_2 is deterministic CFL
C. L_3 is a CFL but not a deterministic CFL
D. L_3 is deterministic CFL

Your Answer: | Correct Answer: B | Not Attempted | Time taken: 00min 00sec | Discuss

Q #8 | Numerical Type | Award: 1 | Penalty: 0 | Theory of Computation

Number of states in the minimal DFA that accepts the language described by the following regular expression is _____

$$(ab + cd)^*(c\varepsilon + \emptyset b)$$

Your Answer: | Correct Answer: 4 | Not Attempted | Time taken: 00min 00sec | Discuss

Q #9 | Multiple Select Type | Award: 1 | Penalty: 0 | Compiler Design

Consider the tiny grammar G given below -

$$\begin{aligned} \mathrm{E} &\rightarrow \mathrm{A}|\mathrm{B} \\ \mathrm{A} &\rightarrow a \mid c \\ \mathrm{B} &\rightarrow b \mid c \end{aligned}$$

Which of the following is true?

A. G is $\mathrm{LL}(1)$
B. G is $\mathrm{SLR}(1)$
C. G is $\mathrm{LR}(1)$
D. None of the above

Your Answer: | Correct Answer: D | Not Attempted | Time taken: 00min 00sec | Discuss

Q #10 | Multiple Select Type | Award: 1 | Penalty: 0 | Databases

Which of the following statements is/are true in context of the Two-Phase Locking Protocol?

A. A shared lock allows a transaction to write a data item.
B. More than one transaction can have a shared lock on an item at the same time.
C. More than one transaction can have an exclusive lock on an item at the same time.
D. Deadlock can be avoided by releasing locks as early as possible.

Your Answer: | Correct Answer: B | Not Attempted | Time taken: 00min 00sec | Discuss

Q #11 | Multiple Select Type | Award: 1 | Penalty: 0 | Databases

Which of the following statements is/are true in context of the Two-Phase Locking $(2\mathrm{PL})$ Protocol?

A. Conservative $2\mathrm{PL}$ is deadlock-free.
B. Rigorous $2\mathrm{PL}$ releases only write locks after commit, shared locks can be released before commit as well.
C. Lock upgrades are allowed during the shrinking phase of $2\mathrm{PL}$.
D. Strict $2\mathrm{PL}$ produces strict schedules.

Your Answer: | Correct Answer: A;D | Not Attempted | Time taken: 00min 00sec | Discuss

Q #12 | Multiple Select Type | Award: 1 | Penalty: 0 | Databases

How many of the following statements is/are false regarding Deadlock Handling in concurrency control protocols?

A. A deadlock prevention protocol ensures deadlock never occurs.

B. In Wound-Wait, an older transaction waits on a younger one.
C. A wait-for graph has undirected edges between transactions.
D. A wait-for graph with 5 nodes but only 3 in a cycle is not in a deadlock state.

Your Answer: | Correct Answer: B;C;D | Not Attempted | Time taken: 00min 00sec | Discuss

Q #13 | Multiple Select Type | Award: 1 | Penalty: 0 | Databases

How many of the following statements are true regarding the Timestamp Protocol?

A. Deadlock is not possible with timestamp protocols.
B. A transaction that arrives later to the system always has a smaller timestamp.
C. The precedence graph for the timestamp algorithm has edges from smaller timestamp transactions to larger ones.
D. A write is only performed if transaction has a timestamp $\geq$ the read timestamp for the data item.

Your Answer: | Correct Answer: A;C;D | Not Attempted | Time taken: 00min 00sec | Discuss

Q #14 | Multiple Select Type | Award: 1 | Penalty: 0 | Databases

Please mark the functional dependencies that are consistent with the following table.

A	B	C	D
1	3	6	2
2	4	1	1
1	3	5	2
2	2	1	2

A. $\mathrm{A} \rightarrow \mathrm{D}$
B. $\mathrm{AB} \rightarrow \mathrm{D}$
C. $\mathrm{A} \rightarrow \mathrm{CD}$
D. $\mathrm{ABC} \rightarrow \mathrm{D}$

Your Answer: | Correct Answer: B;D | Not Attempted | Time taken: 00min 00sec | Discuss

Q #15 | Multiple Choice Type | Award: 1 | Penalty: 0.33 | Databases

Consider the following two transactions and schedule S (time goes from top to bottom).

Transaction T_0	Transaction T_1
$r_0[\mathrm{A}]$	
$w_0[\mathrm{A}]$	
	$r_1[\mathrm{A}]$
	$r_1[\mathrm{B}]$
	c_1
$r_0[\mathrm{B}]$	
$w_0[\mathrm{B}]$	
c_0	

Which of the following is true?

A. S is conflict serializable(CS) But not view serializable(VS).
B. S is VS but not CS.
C. S is both CS and VS

D. S is neither CS, nor VS.

Your Answer: | Correct Answer: D | Not Attempted | Time taken: 00min 00sec | Discuss

Q #16 | Numerical Type | Award: 1 | Penalty: 0 | Databases

The order of a leaf node in a B tree is the maximum number of (value, data record pointer) pairs it can hold. Given that the block size is $1\ \mathrm{K}$ bytes(i.e. 1024 bytes), data record pointer is 7 bytes long, the value field is 9 bytes long and a block pointer is 6 bytes long, what is the order of the leaf node?

Your Answer: | Correct Answer: 46 | Not Attempted | Time taken: 00min 00sec | Discuss

Q #17 | Multiple Choice Type | Award: 1 | Penalty: 0.33 | Databases

Assume that a data file has an index consisting of N items, where N is large. If a binary search of the index is used to find an item, then, of the following, which best approximates the mean number of comparisons required to locate a specific index entry?

A. $(\mathrm{N}+1)/2$
B. $\mathrm{N}(\mathrm{N}-1)/2$
C. $(\log_2 \mathrm{N})-1$
D. $\mathrm{N}\log_2 \mathrm{N}$

Your Answer: | Correct Answer: C | Not Attempted | Time taken: 00min 00sec | Discuss

Q #18 | Multiple Choice Type | Award: 1 | Penalty: 0.33 | Databases

Let $\mathrm{R}(\mathrm{a},\mathrm{b})$ be a schema and $\mathrm{Q1}$ and $\mathrm{Q2}$ are queries on R.

```
Q1: SELECT * FROM R;
Q2: (SELECT * FROM R) INTERSECT (SELECT * FROM R);
```

Which of the following statements is true?

A. $\mathrm{Q1}$ and $\mathrm{Q2}$ produce the same answer.
B. The answer to $\mathrm{Q1}$ is always contained in the answer to $\mathrm{Q2}$.
C. The answer to $\mathrm{Q2}$ is always contained in the answer to $\mathrm{Q1}$.
D. $\mathrm{Q1}$ and $\mathrm{Q2}$ produce different answers.

Your Answer: | Correct Answer: C | Not Attempted | Time taken: 00min 00sec | Discuss

Q #19 | Multiple Choice Type | Award: 1 | Penalty: 0.33 | Databases

Let $\mathrm{R}_1, \mathrm{R}_2, \ldots,\ R_n$ be a decomposition of schema U. Let $u(\mathrm{U})$ be a relation, and let $r_i = \Pi_{\mathrm{R}_i}(u)$
Which of the following is true?

A. $u \subseteq r_1 \bowtie r_2 \bowtie r_3 \bowtie r_4 \bowtie \ldots r_n$
B. $u \supseteq r_1 \bowtie r_2 \bowtie r_3 \bowtie r_4 \bowtie \ldots r_n$
C. $u = r_1 \bowtie r_2 \bowtie r_3 \bowtie r_4 \bowtie .. r_n$
D. None of the above

Your Answer: | Correct Answer: A | Not Attempted | Time taken: 00min 00sec | Discuss

Q #20 | Multiple Choice Type | Award: 1 | Penalty: 0.33 | Databases

In relational algebra, the join operator ($\bowtie$) is logically redundant if we have additionally

A. intersection ($\cap$).
B. crossproduct ($\times$), select (σ), and project (π).
C. difference ($-$) and union ($\cup$).
D. crossproduct ($\times$) and difference ($-$).

Your Answer: | Correct Answer: B | Not Attempted | Time taken: 00min 00sec | Discuss

Q #21 | Multiple Choice Type | Award: 1 | Penalty: 0.33 | Databases

A weak entity

A. inherits part of its key from the "parent" entities to which it is related.
B. must have partial participation in its identifying relationship set.
C. is an entity with no attributes besides its key.
D. is never mapped to a table in conversion to a relational schema.

Your Answer: | Correct Answer: A | Not Attempted | Time taken: 00min 00sec | Discuss

Q #22 | Multiple Select Type | Award: 1 | Penalty: 0 | Databases

Here's a relation (R), its attributes and its functional dependencies (F) :

$$\mathrm{R}(\mathrm{A}, \mathrm{B}, \mathrm{C}, \mathrm{D}, \mathrm{E})$$
$$\mathrm{F} = \{\mathrm{CD} \rightarrow \mathrm{B}, \mathrm{A} \rightarrow \mathrm{D}, \mathrm{E} \rightarrow \mathrm{C}\}$$

Which of the following is/are NOT in the functional dependency closure of F $\left(\mathrm{F}^{+}\right)$?

A. $\mathrm{AC} \rightarrow \mathrm{B}$
B. $\mathrm{AE} \rightarrow \mathrm{B}$
C. $\mathrm{A} \rightarrow \mathrm{A}$
D. $\mathrm{E} \rightarrow \mathrm{CD}$

Your Answer: | Correct Answer: D | Not Attempted | Time taken: 00min 00sec | Discuss

Q #23 | Multiple Choice Type | Award: 1 | Penalty: 0.33 | Computer Networks

Assume a link has a round-trip propagation delay of 100 msec. Also, assume an 8 Kbps transmitter and a frame with 3 bit sequence numbers. What is the minimum frame size that can guarantee a 50% channel utilization assuming the go back N protocol?

A. 100 bits
B. $800/7$ bits
C. $800/13$ bits
D. 200 bits

Your Answer: | Correct Answer: C | Not Attempted | Time taken: 00min 00sec | Discuss

Q #24 | Multiple Select Type | Award: 1 | Penalty: 0 | Computer Networks

Consider the following IP addresses and their class, which pair is/are correct?

A. $111.56.45.78$: Class B
B. $221.34.7.82$: Class C
C. $111.56.45.78$: Class A
D. $221.34.7.82$: Class D

Your Answer: | Correct Answer: B;C | Not Attempted | Time taken: 00min 00sec | Discuss

Q #25 | Multiple Choice Type | Award: 1 | Penalty: 0.33 | Computer Networks

Suppose a 100 Mbps point-to-point link is being set up between Earth and a new lunar colony. The distance from the moon to Earth is $385,000\ \mathrm{km}$ and data travels over the link at the speed of light $(3 \times 10^8\ \mathrm{m/s})$.

What is the bandwidth-delay product for the link?

A. 20 MByte
B. 16 MByte
C. 12 MByte
D. 24 MByte

Your Answer: | Correct Answer: B | Not Attempted | Time taken: 00min 00sec | Discuss

Q #26 | Multiple Select Type | Award: 1 | Penalty: 0 | Computer Networks

Which of the following statements regarding TCP are false?

A. A TCP transmitter normally interprets three duplicate ACKs to mean that, while data packets have been received out of order, all data is successfully being delivered.
B. TCP is a Transport layer protocol.
C. Acknowledging every TCP packet with a separate ACK is useful because it keeps the transmitters' congestion window size constant.
D. TCP is a network layer protocol.

Your Answer: | Correct Answer: A;C;D | Not Attempted | Time taken: 00min 00sec | Discuss

Q #27 | Multiple Choice Type | Award: 1 | Penalty: 0.33 | Computer Networks

The process of subnetting refers to what?

A. Stealing bits from the network portion of the address to create more sub networks
B. Stealing bits from the subnet mask in order to create more sub networks
C. Stealing bits from the host portion of the address to create more sub networks
D. Stealing bits from the inverse mask in order to create more sub networks

Your Answer: | Correct Answer: C | Not Attempted | Time taken: 00min 00sec | Discuss

Q #28 | Multiple Choice Type | Award: 1 | Penalty: 0.33 | Computer Networks

Which of the following protocol is used by the routers to send error messages when communicating with another IP address?

A. IP
B. ICMP
C. MQTT
D. NTP

Your Answer: | Correct Answer: B | Not Attempted | Time taken: 00min 00sec | Discuss

Q #29 | Multiple Choice Type | Award: 1 | Penalty: 0.33 | Computer Networks

Consider datagram packet switching. A has 3 packets to send to B, via 2 switches. The transmission time of a packet is $10\ \mathrm{ms}$ and the link propagation delay is $2\ \mathrm{ms}$. All links are identical. Assuming no queuing or processing delay, if A starts transmitting at time 0, at what time is the data fully received by B?

A. $36\ \mathrm{ms}$
B. $48\ \mathrm{ms}$
C. $56\ \mathrm{ms}$
D. $66\ \mathrm{ms}$

Your Answer: | Correct Answer: C | Not Attempted | Time taken: 00min 00sec | Discuss

Q #30 | Numerical Type | Award: 1 | Penalty: 0 | Computer Networks

Consider sending a 3000 byte datagram (including 20 bytes of IP header) into a link that has an MTU of 500 bytes. How many fragments are generated?

Your Answer: | Correct Answer: 7 | Not Attempted | Time taken: 00min 00sec | Discuss

Q #31 | Multiple Choice Type | Award: 2 | Penalty: 0.67 | Computer Networks

A router is blasting out IP packets whose total length (data plus header) is 1024 bytes.

Assuming that packets live for $10\ \mathrm{sec}$, what is the maximum line speed the router can operate at without danger of cycling through the IP datagram identification number space?

A. $53.7\ \mathrm{Mbps}$
B. $2.1\ \mathrm{Mbps}$
C. $5.37\ \mathrm{Mbps}$
D. $21\ \mathrm{Mbps}$

Your Answer: | Correct Answer: A | Not Attempted | Time taken: 00min 00sec | Discuss

Q #32 | Multiple Choice Type | Award: 2 | Penalty: 0.67 | Computer Networks

Suppose two hosts, A and B, are separated by $20,000$ kilometers and are connected by a direct link of $\mathrm{R} = 2\mathrm{Mbps}$. Suppose the propagation speed over the link is $2.5 * 10^8\ \mathrm{meters/sec}$. Consider sending a file of $800,000$ bits from Host A to Host B. Suppose the file is sent continuously as one large message. What is

the maximum number of bits that will be in the link at any given time?

A. 20971
B. 167772
C. 335544
D. 335545

Your Answer: | Correct Answer: B | Not Attempted | Time taken: 00min 00sec | Discuss

Q #33 | Multiple Choice Type | Award: 2 | Penalty: 0.67 | Computer Networks

You want to transfer a file from Kanpur to Madras. For this problem, assume the following:

- The size of file is $122,000$ bytes. It will be transferred in $1,500$-byte data packets, of which 40 bytes are taken up with headers. The size of acknowledgment packets is 40 bytes including header. Every packet is acknowledged.
- The communication is bidirectional and the bandwidth is 12 Mbps (megabits/sec) in each direction. Hosts can send and receive at the same time.
- The latency from Kanpur to Madras is 12 ms, as is the latency in the opposite direction.

With Stop-and-Wait, how long will it take to transfer the file? (Include the time to receive the acknowledgment for the final data packet.)

A. 2052.2 ms
B. 2108.8 ms
C. 1022.8 ms
D. 1091.02 ms

Your Answer: | Correct Answer: B | Not Attempted | Time taken: 00min 00sec | Discuss

Q #34 | Numerical Type | Award: 2 | Penalty: 0 | Computer Networks

Suppose A is connected to B via an intermediate router R. The link $A-R$ is instantaneous, but the $R \rightarrow B$ link transmits only 14 packet each second, one at a time. Assume A sends to B using sliding window protocol with window size $= 4$. How large does the queue at R grow in steady state?

Steady state is state of system after some time (say after 5 minutes).

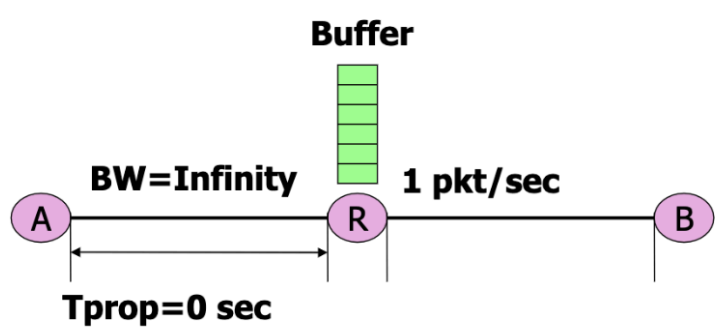

Your Answer: | Correct Answer: 2 | Not Attempted | Time taken: 00min 00sec | Discuss

Q #35 | Multiple Choice Type | Award: 2 | Penalty: 0.67 | Computer Networks

Let A and B be two stations attempting to transmit on an Ethernet. Each has frames ready to send all the time; A's frames will be numbered $\mathrm{A1}$, $\mathrm{A2}$, and so on, and B's similarly. Let $\mathrm{T} = 51.2\ \mu$ be the exponential backoff base unit. Suppose A and B simultaneously attempt to send frame 1, collide, and happen to choose backoff times of $0 \times \mathrm{T}$ and $1 \times \mathrm{T}$, respectively, meaning A wins the race and transmits $\mathrm{A1}$ while Bwaits. At the end of this transmission, B will attempt to retransmit $\mathrm{B1}$ while A will attempt to transmit $\mathrm{A2}$. These attempts will collide, but now A backs off for either $0 \times \mathrm{T}$ or $1 \times \mathrm{T}$, while B backs off for time equal to one of $0 \times \mathrm{T}, \ldots, 3 \times \mathrm{T}$.

Give the probability that A wins this second backoff race after this collision; that is, A's choice of backoff time is less than B's.

A. $1/3$
B. $5/8$
C. $1/2$
D. $3/8$

Your Answer: | Correct Answer: B | Not Attempted | Time taken: 00min 00sec | Discuss

Q #36 | Multiple Select Type | Award: 2 | Penalty: 0 | Theory of Computation

A context-free grammar is said to be left recursive if it has a non-terminal A such that there is a derivation $\mathrm{A} \Rightarrow {}^{+}\mathrm{A}\alpha$ for some sequence of grammar symbols α. Which of the following grammar is left-recursive?

A. $\mathrm{A} \rightarrow \mathrm{Bb}; \mathrm{A} \rightarrow \mathrm{a}$
$\mathrm{B} \rightarrow \mathrm{Cc}; \mathrm{B} \rightarrow \mathrm{b}$
$\mathrm{C} \rightarrow \mathrm{Aa}; \mathrm{C} \rightarrow \mathrm{c}$

B. $\mathrm{S} \rightarrow \mathrm{Aa} \mid \mathrm{Bb}$
$\mathrm{A} \rightarrow \mathrm{Aa}|\mathrm{Abc}|\mathrm{c} \mid \mathrm{Sb}$
$\mathrm{B} \rightarrow \mathrm{bb}$

C. $\mathrm{A} \rightarrow \mathrm{Br}$
$\mathrm{B} \rightarrow \mathrm{Cs}$
$\mathrm{C} \rightarrow \mathrm{At}$

D. $\mathrm{S} \rightarrow \mathrm{Aa}|\mathrm{Bb}|\mathrm{c}$
$\mathrm{A} \rightarrow \mathrm{Ba} \mid \in$
$\mathrm{B} \rightarrow \mathrm{d}$

Your Answer: | Correct Answer: A;B;C | Not Attempted | Time taken: 00min 00sec | Discuss

Q #37 | Multiple Choice Type | Award: 2 | Penalty: 0.67 | Theory of Computation

Consider the following grammar.

$$\begin{aligned} \mathrm{S} &::= \mathrm{AB} \\ \mathrm{A} &::= \mathrm{a} \\ \mathrm{A} &::= \mathrm{BaB} \\ \mathrm{B} &::= \mathrm{bbA} \end{aligned}$$

Which of the following is FALSE?

A. The length of every string produced by the grammar is even.
B. No string produced by the grammar has an odd number of consecutive b's.
C. No string produced by the grammar has three consecutive a's.
D. No string produced by the grammar has four consecutive b's.

Your Answer: | Correct Answer: D | Not Attempted | Time taken: 00min 00sec | Discuss

Q #38 | Multiple Choice Type | Award: 2 | Penalty: 0.67 | Theory of Computation

Consider the following statements :

1. We define middle $(\mathrm{L}) = \{x : \exists y, z \in \Sigma^*, (yxz \in \mathrm{L})\}$. Then middle $(\{a^n b^n c^n, n \geq 0\}) = a^* b^* c^*$.
2. We define middle $(\mathrm{L}) = \{x : \exists y, z \in \Sigma^*, (yxz \in \mathrm{L})\}$. Then middle $(\{a^n b^n c^n, n \geq 0\})$ is regular.

Which of the above statements are true?

A. Both
B. Only 1
C. Only 2
D. None

Your Answer: | Correct Answer: D | Not Attempted | Time taken: 00min 00sec | Discuss

Q #39 | Multiple Select Type | Award: 2 | Penalty: 0 | Theory of Computation

The Turing machine $(\{q_0, q_1, q_2\}, \{0, 1\}, \{0, 1, \mathrm{B}\}, \delta, q_0, \mathrm{B})$ has the following three transitions, and no others:

$$\delta(q_0, 0) = (q_1, 1, \mathrm{R})$$
$$\delta(q_1, 1) = (q_2, 0, \mathrm{L})$$
$$\delta(q_2, 1) = (q_0, 1, \mathrm{R})$$

Which of the following statements is/are true?

A. The given TM, on input 0110, will produce output 1110 when TM halts.
B. The given TM, on input 0110, will produce output 1010 when TM halts.
C. The given TM, on input 0110, will run forever without halting.
D. The given TM halts on ALL strings.

Your Answer: | Correct Answer: A;D | Not Attempted | Time taken: 00min 00sec | Discuss

Q #40 | Multiple Choice Type | Award: 2 | Penalty: 0.67 | Theory of Computation

Consider the paragraph Y :

Assume set A is a subset of set B. We know that if a property P is satisfied by ALL elements of B then it is also satisfied by ALL elements of A since A is a subset of B.

A student X has the following argument about closure properties of DCFL set :

We understand that the DCFL set(set of all DCFL languages) is not closed under Union. However, the DCFL set is a proper subset of the CFL set and the CFL set is closed under union. So how can a proper subset Not inherit the global properties of its parent set?

So, by paragraph Y, If the CFL set is closed under union then the DCFL set should also be closed under union since the DCFL set is a subset of the CFL set.

Where is the mistake in the above argument by student X?

A. There is no mistake in student X's argument and the DCFL set is closed under union.
B. The mistake is that the CFL set is not closed under union.

C. The mistake is that from the said argument we can only deduce that union of two DCFL is CFL. We can't deduce that the union of two DCFL is DCFL.
D. The mistake is that the set of DCFL is equal to the set of CFL.

Your Answer: | Correct Answer: C | Not Attempted | Time taken: 00min 00sec | Discuss

Q #41 | Multiple Select Type | Award: 2 | Penalty: 0 | Theory of Computation

Which of the following languages are Turing-recognizable?

A. $\{\langle M\rangle | M$ is a deterministic Turing machine and M accepts $010\}$.
B. $\{\langle M\rangle | M$ is a non-deterministic Turing machine and M accepts $010\}$.
C. $\{\langle M\rangle | M$ is a Turing machine and M does not accept $101\}$.
D. $\{\langle M\rangle \mid M$ is a Turing machine and $L(M) = \Sigma^*\}$.

Your Answer: | Correct Answer: A;B | Not Attempted | Time taken: 00min 00sec | Discuss

Q #42 | Multiple Choice Type | Award: 2 | Penalty: 0.67 | Theory of Computation

Consider the following languages :

1. The language of regular expression $(\mathbf{0}+\mathbf{1})^*\mathbf{11}(\mathbf{0}+\mathbf{1})^*$
2. The language of regular expression $(\mathbf{0}^*\mathbf{1}^*\mathbf{11})^*\mathbf{0}^*\mathbf{110}^*\mathbf{1}^*$

Which of the following is true?

A. (1) is proper subset of (2).
B. (2) is proper subset of (1).
C. $(1) = (2)$.
D. Neither (1) is subset of (2), nor (2) is subset of (1).

Your Answer: | Correct Answer: B | Not Attempted | Time taken: 00min 00sec | Discuss

Q #43 | Multiple Select Type | Award: 2 | Penalty: 0 | Theory of Computation

Here is a context-free grammar $G = (\{S, A, B\}, \{0, 1\}, P, S)$, where P is the set of productions:

$$S \rightarrow 0A \mid 1B \mid \epsilon$$
$$A \rightarrow 1S \mid 0AA$$
$$B \rightarrow 0S \mid 1BB$$

Which of the following statements is/are true?

A. The languages generated by G is set of strings which have equal number of 0's and 1's.
B. If A is the start symbol then the language generated by G is set of strings with one more 1 than 0.
C. If B is the start symbol then the language generated by G is set strings with one more 0 than 1.
D. String $1001, 101010$ are generated by G.

Your Answer: | Correct Answer: A;B;C;D | Not Attempted | Time taken: 00min 00sec | Discuss

Q #44 | Multiple Choice Type | Award: 2 | Penalty: 0.67 | Theory of Computation

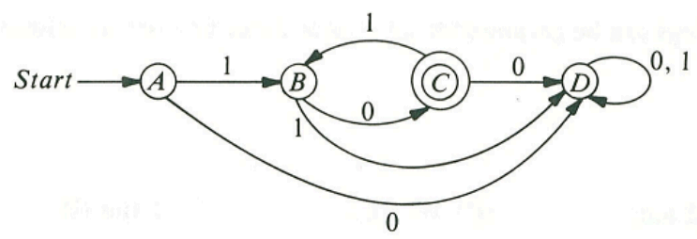

In the figure above, a finite automaton M has start state A and accepting state C. Which of the following regular expressions denotes the set of words accepted by M?

A. 10^*1^*0
B. $01(01)^*$
C. $1(10)^*0$
D. $1(01)^*0$

Your Answer: | Correct Answer: D | Not Attempted | Time taken: 00min 00sec | Discuss

Q #45 | Multiple Choice Type | Award: 2 | Penalty: 0.67 | Theory of Computation

Which of the following regular expressions is equivalent to (describes the same set of strings as) $(a^* + b)^*(c + d)$?

A. $a^*(c + d) + b(c + d)$
B. $a^*(c + d)^* + b(c + d)^*$
C. $a^*(c + d) + b^*(c + d)$
D. $(a + b)^*c + (a + b)^*d$

Your Answer: | Correct Answer: D | Not Attempted | Time taken: 00min 00sec | Discuss

Q #46 | Multiple Select Type | Award: 2 | Penalty: 0 | Compiler Design

Consider the following CFG, where the set of terminals is $\{a, b, \#, \%, !\}$:

$$\begin{aligned} \mathrm{S} &\rightarrow \%a\mathrm{T} \mid \mathrm{U}! \\ \mathrm{T} &\rightarrow a\mathrm{S} \mid ba\mathrm{T} \mid \epsilon \\ \mathrm{U} &\rightarrow \#a\mathrm{TU} \mid \epsilon \end{aligned}$$

Which of the following is true?

A. The FIRST sets for each of the non-terminals $\mathrm{S}, \mathrm{T}, \mathrm{U}$ is as follows :

$$\begin{aligned} &\mathrm{S} : \{\%, \#, !\} \\ &\mathrm{T} : \{a, b, \epsilon\} \\ &\mathrm{U} : \{\#, \epsilon\} \end{aligned}$$

B. The FOLLOW sets for each of the non-terminals $\mathrm{S}, \mathrm{T}, \mathrm{U}$ is as follows :

$$\begin{aligned} &\mathrm{S} : \{\#, !, \$\} \\ &\mathrm{T} : \{\#, !, \$\} \\ &\mathrm{U} : \{!\} \end{aligned}$$

C. The grammar is $\mathrm{LL}(1)$.
D. The grammar is $\mathrm{LR}(1)$.

Your Answer: | Correct Answer: A;B;C;D | Not Attempted | Time taken: 00min 00sec | Discuss

Q #47 | Multiple Select Type | Award: 2 | Penalty: 0 | Compiler Design

Consider the following left and right recursive grammars for the language a^*.

- $\mathrm{G1} : \mathrm{S} \rightarrow a\mathrm{S} \mid \epsilon$
- $\mathrm{G2} : \mathrm{S} \rightarrow \mathrm{S}a \mid \epsilon$

Which of the following is true about shift-reduce parsing of the above two grammars?

A. $\mathrm{G1}$ can be parsed with shift-reduce parser.
B. $\mathrm{G2}$ can be parsed with shift-reduce parser.
C. Shift-reduce parser for $\mathrm{G1}$ requires an unbounded stack size to parse large strings (like a million a's)
D. Shift-reduce parser for $\mathrm{G2}$ requires a constant stack size to parse large strings (like a million a's)

Your Answer: | Correct Answer: A;B;C;D | Not Attempted | Time taken: 00min 00sec | Discuss

Q #48 | Multiple Select Type | Award: 2 | Penalty: 0 | Compiler Design

Consider the following grammar.

$$\mathrm{S} \rightarrow \mathrm{aS\ b}$$
$$\mathrm{S} \rightarrow \mathrm{b}$$

Which of the following statements is (are) true?

A. The grammar is ambiguous.
B. The grammar is suitable for top-down parsing.
C. The grammar is suitable for bottom-up parsing.
D. The grammar is $\mathrm{LR}(0)$

Your Answer: | Correct Answer: B;C;D | Not Attempted | Time taken: 00min 00sec | Discuss

Q #49 | Numerical Type | Award: 2 | Penalty: 0 | Compiler Design

This is a right-recursive grammar:

$$\mathrm{E} \rightarrow \mathrm{T} \mid \mathrm{T} + \mathrm{E}$$
$$\mathrm{T} \rightarrow \mathrm{P} \mid \mathrm{P} * \mathrm{T}$$
$$\mathrm{P} \rightarrow \mathrm{id}$$

Following is the parse tree for sentence $x + y * z$.

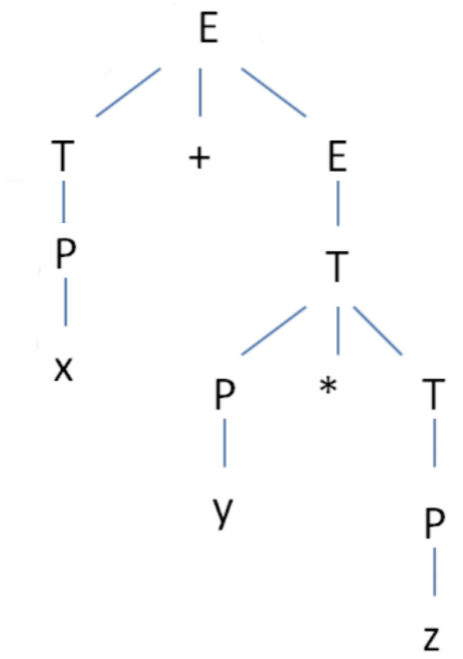

How many handles are present in parse tree?

Your Answer: | Correct Answer: 8 | Not Attempted | Time taken: 00min 00sec | Discuss

Q #50 | Multiple Select Type | Award: 2 | Penalty: 0 | Compiler Design

Which of the following grammar(s) have following two properties -

1. Enforces left-associativity of $+$ and $\times$
2. Enforces precedence of $\times$ over $+$

A. $\mathrm{E} \rightarrow \mathrm{id} \mid \mathrm{E}+\mathrm{id} \mid \mathrm{E} \times \mathrm{id} \mid (\mathrm{E})$

B. $\mathrm{E} \rightarrow \mathrm{id} \mid id+\mathrm{E} \mid \mathrm{id} \times \mathrm{E} \mid (\mathrm{E})$

C. $\mathrm{E} \rightarrow \mathrm{T}+\mathrm{E} \mid \mathrm{T}$
$\mathrm{T} \rightarrow \mathrm{P} \times \mathrm{T} \mid \mathrm{P}$
$\mathrm{P} \rightarrow \mathrm{id} \mid (\mathrm{E})$

D. $\mathrm{E} \rightarrow \mathrm{E}+\mathrm{T} | \mathrm{T}$
$\mathrm{T} \rightarrow \mathrm{T} \times \mathrm{P} | \mathrm{P}$
$\mathrm{P} \rightarrow \mathrm{id} \mid (\mathrm{E})$

Your Answer: | Correct Answer: D | Not Attempted | Time taken: 00min 00sec | Discuss

Q #51 | Multiple Choice Type | Award: 2 | Penalty: 0.67 | Compiler Design

Here is a program in IR for computing the double factorial of 5 (5!!):

```
 0: d := 2
 1: n := 5
 2: if (d=0) goto 11
 3: f := 1
 4: if (n=0) goto 8
 5: f := n * f
 6: n := n - 1
 7: goto 4
 8: d := d - 1
 9: n := f
10: goto 2
11: r := f
```

What will be the number of edges in the control flow graph?

A. 6
B. 7
C. 8
D. 9

Your Answer: | Correct Answer: C | Not Attempted | Time taken: 00min 00sec | Discuss

Q #52 | Numerical Type | Award: 2 | Penalty: 0 | Databases

Consider the following partial schedule for several data items for transactions T_i with timestamp i :

T_1	T_2	T_3	T_4	T_5
				read(X)
read(Y)	read(Y)			
		write(Y)		
				read(Z)
	write(X)			
read(X)				
		write(Z)		
				write(Y)
				write(Z)

How many transactions are Aborted by timestamp scheduler?

Your Answer: | Correct Answer: 2 | Not Attempted | Time taken: 00min 00sec | Discuss

Q #53 | Multiple Select Type | Award: 2 | Penalty: 0 | Databases

Consider a concurrency control manager by timestamps. Below are several sequences of events, including start events, where sti means that transaction T_i starts and coi means T_i commits. These sequences represent real time, and the timestamp-based scheduler will allocate timestamps to transactions in the order of their starts.

Which of the following schedules are allowed/generated by the timestamp scheduler i.e. No transaction is aborted by the timestamp scheduler?

A. $st1; st2; r1(A); r2(A); w1(B); w2(B)$
B. $st1; st2; r2(A); co2; r1(A); w1(A)$

C. $st1; st2; st3; r1(A); w3(A); co3; r2(B); w2(A)$
D. $st1; st2; st3; r1(A); w1(A); r2(A)$

Your Answer: | Correct Answer: A;D | Not Attempted | Time taken: 00min 00sec | Discuss

Q #54 | Multiple Select Type | Award: 2 | Penalty: 0 | Databases

Consider a relation $\mathrm{R(A, B)}$ that contains r tuples; assume $r > 0$. Make no assumptions about keys $\&$ assume that the domain of all attributes is integers.

Consider the following queries:

- $\mathrm{Q1} : (\mathrm{R} \bowtie \mathrm{R}) \bowtie \mathrm{R}$
- $\mathrm{Q2} : \sigma_{\mathrm{A>B}}\mathrm{R} \cup \sigma_{\mathrm{A<B}}\mathrm{R}$

For a relational algebra expression Q, Let $\min(\mathrm{Q}), \max(\mathrm{Q})$ be the minimum and maximum number of tuples that could be in the result of the expression Q.

Which of the following is/are correct?

A. $\min(\mathrm{Q1}) = 0; \min(\mathrm{Q2}) = 0$
B. $\min(\mathrm{Q1}) = r; \min(\mathrm{Q2}) = 0$
C. $\max(\mathrm{Q1}) = rrr; \max(\mathrm{Q2}) = r$
D. $\max(\mathrm{Q1}) = r; \max(\mathrm{Q2}) = r$

Your Answer: | Correct Answer: B;D | Not Attempted | Time taken: 00min 00sec | Discuss

Q #55 | Multiple Choice Type | Award: 2 | Penalty: 0.67 | Databases

Here is a simple B^+ tree with a root and 4 leaves.

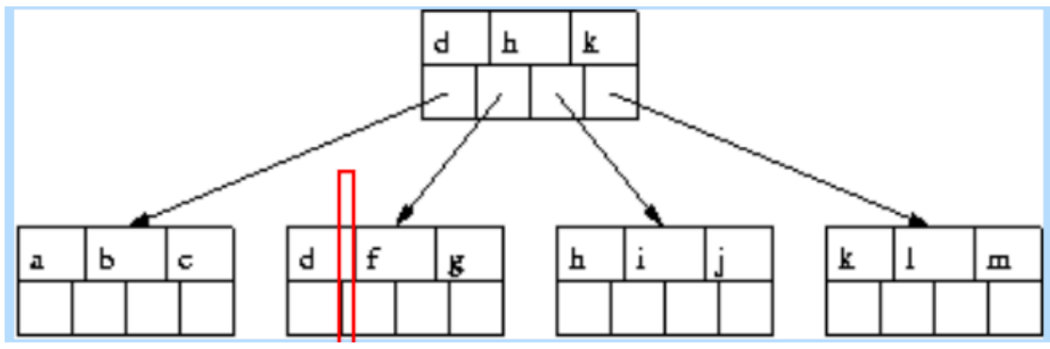

Assume that each node has room for 3 keys and 4 pointers, and the ordering of keys is alphabetic. Also assume that when a node is split, and there is an odd number of pointers, the new node with the larger number of pointers is to the left of the other. Suppose that we insert a record with key 'e' into this tree. Draw the new tree. Which of the following would be the list of non-null keys in some node of the resulting tree (i.e. Key Content of some node)?

A. k
B. efg
C. f
D. dhk

Your Answer: | Correct Answer: A | Not Attempted | Time taken: 00min 00sec | Discuss

Q #56 | Numerical Type | Award: 2 | Penalty: 0 | Databases

Consider the following relational database tables R , S and T :

R

A	B
1	2
3	2
5	6
7	8
9	8

S

B	C
6	2
2	4
8	1
8	3
2	5

T

A	C
7	1
1	2
9	3
5	4
3	5

What is the number of tuples in the result of the following relational algebra query:

$$R \bowtie S \bowtie T?$$

Your Answer: | Correct Answer: 3 | Not Attempted | Time taken: 00min 00sec | Discuss

Q #57 | Multiple Choice Type | Award: 2 | Penalty: 0.67 | Databases

Consider a database COMPANY. The following two tables in this database store the data of employees and their dependents.

Employee (Fname, Lname, Ssn, Sex, Dno)
Dependent(Essn, Dependent_name, Sex, Relationship)

Now consider the following two SQL queries.
Q1:

```
SELECT E.Fname, E.Lname
FROM EMPLOYEE AS E
WHERE E.Ssn IN ( SELECT Essn
                 FROM DEPENDENT AS D
                 WHERE E.Fname=D.Dependent-name AND E.Sex=D.Sex );
```

Q2 :

```
SELECT E.Fname, E.Lname
FROM EMPLOYEE AS E, DEPENDENT AS D
WHERE E.Ssn=D.Essn AND E.Sex=D.Sex AND E.Fname=D.Dependent-name;
```

We want to Retrieve the name of each employee who has a dependent with the same first name and is the same sex as the employee.

Which of the following is true?

A. Q1 produces the desired result, Q2 does not.
B. Q2 produces the desired result, Q1 does not.
C. Both Q1, Q2 produce the desired result.
D. Neither Q1 nor Q2 produces the desired result.

Your Answer: | Correct Answer: C | Not Attempted | Time taken: 00min 00sec | Discuss

Q #58 | Multiple Choice Type | Award: 2 | Penalty: 0.67 | Databases

Which of the following ER diagram represents the given requirements

"Every professor teaches exactly one course"

A.
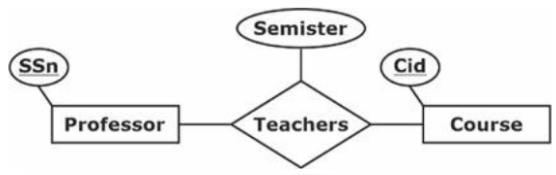

B.
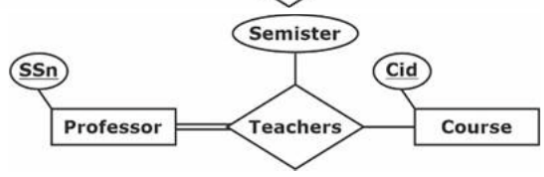

C.
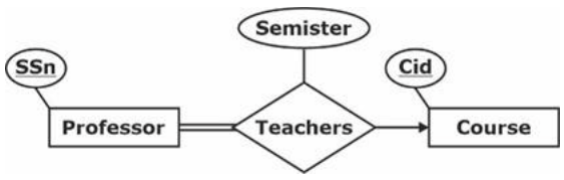

D.
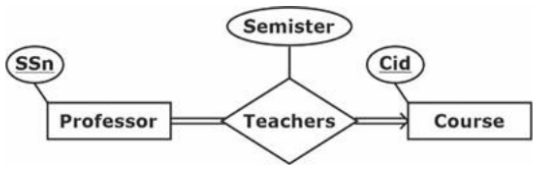

Your Answer: | Correct Answer: C | Not Attempted | Time taken: 00min 00sec | Discuss

Q #59 | Multiple Choice Type | Award: 2 | Penalty: 0.67 | Computer Networks

During the negotiation period, the transmitter and receiver have agreed to use the polynomial 1001 for their CRC code. Suppose that a receiver has received the following frame 11001001010.

Consider the following statements :

- $\mathrm{S1}$: The receiver Should reject the frame.
- $\mathrm{S2}$: receiver will get the remainder of all zeroes.

Which of the following is true?

A. Only $\mathrm{S1}$
B. Only $\mathrm{S2}$
C. Both
D. None

Your Answer: | Correct Answer: A | Not Attempted | Time taken: 00min 00sec | Discuss

Q #60 | Multiple Choice Type | Award: 2 | Penalty: 0.67 | Computer Networks

Assume a link has a round-trip propagation delay of 100 msec. Also, assume an 8 Kbps transmitter and a frame with 3 bit sequence numbers. What is the minimum frame size that can guarantee a 50% channel utilization assuming the stop-and-wait protocol?

A. 50 Bytes
B. 100 Bytes
C. 150 Bytes
D. 200 Bytes

Your Answer: | Correct Answer: B | Not Attempted | Time taken: 00min 00sec | Discuss

Q #61 | Multiple Choice Type | Award: 2 | Penalty: 0.67 | Computer Networks

For the network shown below, use Dijkstra's algorithm to find the optimal route from A to J.

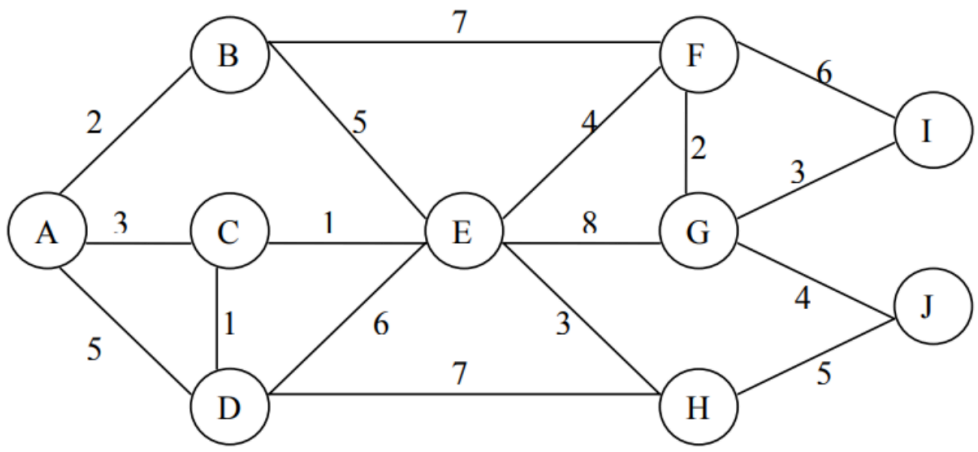

A. A C H E J
B. A C E J H
C. A C J H E
D. A C E H J

Your Answer: | Correct Answer: D | Not Attempted | Time taken: 00min 00sec | Discuss

Q #62 | Multiple Choice Type | Award: 2 | Penalty: 0.67 | Computer Networks

Suppose computers A and B have IP addresses $10.105.1.113$ and $10.105.1.91$ respectively and they both use the same netmask N. Which of the values of N given below should not be used if A and B should belong to the same network?

A. $255.255.255.0$
B. $255.255.255.128$
C. $255.255.255.192$
D. $255.255.255.224$

Your Answer: | Correct Answer: D | Not Attempted | Time taken: 00min 00sec | Discuss

Q #63 | Multiple Select Type | Award: 2 | Penalty: 0 | Computer Networks

Below table is a routing table using CIDR. Address bytes are in hexadecimal. The notation "/12" in C4.50.0.0/12 denotes a netmask with 12 leading 1 bits, that is, FF.F0.0.0.

Net/MaskLength	NextHop
C4.5E.2.0/23	A
C4.5E.4.0/22	B
C4.5E.C0.0/19	C
C4.5E.40.0/18	D
C4.4C.0.0/14	E
C0.0.0.0/2	F
80.0.0.0/1	G

State to what next hop the following will be delivered.

A. C4.5E.03.87 will be delivered to B.
B. C4.5E.7F.12 will be delivered to D
C. C4.5E.D1.02 will be delivered to C
D. C4.5E.D1.02 will be delivered to B

Your Answer: | Correct Answer: B;C | Not Attempted | Time taken: 00min 02sec | Discuss

Q #64 | Multiple Select Type | Award: 2 | Penalty: 0 | Computer Networks

Consider the hosts W, X, Y, Z and the learning bridges $\mathrm{B1}$, $\mathrm{B2}$, $\mathrm{B3}$. Assume, that they have empty forwarding tables to begin.

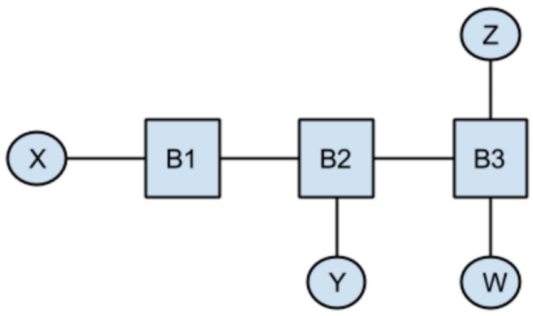

Suppose the following two events happens in the order.

1. Host X sends a packet to W
2. Host Z sends a packet to Y.

Now, finally, host W sends to Y. Which of the following is/are true for this last transmission?

A. Bridge $\mathrm{B2}$ will learn of the location of W.
B. Bridge $\mathrm{B3}$ will learn of the location of W.
C. Host Z will see this packet.
D. Host X will see this packet.

Your Answer: | Correct Answer: A;B;C;D | Not Attempted | Time taken: 00min 00sec | Discuss

Q #65 | Multiple Choice Type | Award: 2 | Penalty: 0.67 | Compiler Design

Consider the original grammar, now with numbered productions:

1	$\mathrm{S} \rightarrow \mathrm{CC}$
2	$\mathrm{C} \rightarrow \mathrm{Cc}$
3	$\mathrm{C} \rightarrow \mathrm{d}$

Here is its $\mathrm{LR}(1)$ parse table:

	c	d	\$	C
0		$s4$		1
1	$s3$	$s4$		2
2	$s3$		acc	
3	$r2$	$r2$	$r2$	
4	$r3$	$r3$	$r3$	

Suppose we want to parse string "dcd" then what will be state of LR parser just before consuming last symbol?

A. 1
B. 2
C. 3
D. 4

Your Answer: | Correct Answer: A | Not Attempted | Time taken: 00min 00sec | Discuss

Copyright & Stuff